AIRCON

UP SO AIR

facebook line

協中泰實業有限公司
บริษัท อัพ โซ แอร์ จำกัด

Tel: 02-1709261-3
Fax: 02-1709257
Email: upsoair@upsoair.co.th

399/61 Moo 13, SoiKingkaew 25/1,
T. Rachatewa, A. Bangplee,
Samutprakarn 10540, Thailand

FH CW - 060 F - ☐

- Scroll series
- CW Water cooled chiller
- Cooling capacity(HP)
- System NO.
  - ▸ S Single
  - ▸ D Double
  - ▸ T Three
  - ▸ F Four
  - ▸ P Modules
- Additional option

Naming conventions

FHCW Series

Water cooled scroll chiller

Power supply : 3Φ~380V 50Hz

Controller : KGP type

Compressor: Type: Hermetic scroll compressor
Starting method: Direct on line start

Refrigerant : R22

Refrigeration oil: KL4

Refrigerant Control method:
Thermostatic expansion valve

Cooling capacity conditions:
Chilled water outlet temperature 7℃, Water flow rate 0.172m^3/(h · kW);
Cooling water inlet temperature 30℃, Water flow rate 0.215m3/(h · kW)

Protection device:
High/low pressure switch,Anti-freezing switch,fusible plug, Overload protection device,Coil overheat protection device, Thermostat,Anti-phase protector,Oil level switch

Others:
If you need recovery heat chiller or hot gas bypass hiller,please inform us before placing order;
Specifications are subject to change without notice for further improvement.

AIRCON

Water Cooled Chiller Units Specification

R22

Item	Model	FHCW	010S	012S	015S	020S	025S	030D	035D	040D	045D	050T	055T	060F	070F
Cooling capacity		kW	29.2	36.9	43.6	69.3	80.9	103.7	116.0	138.5	154.7	173.0	193.4	207.4	232.1
		kcal/h	25,097	31,749	37,495	59,568	69,546	89,201	99,784	119,136	133,045	148,769	166,307	178,402	199,568
Power consumption		kW	6.3	7.5	9.7	15.2	17.7	22.8	25.5	30.4	33.9	38	42.5	45.5	50.9
Operating current		A	11	13	17	27	32	41	46	54	61	68	76	81	91
Starting current		A	68	80	104	163	190	245	273	326	364	408	456	488	546
Compressor	Quantity		2	2	1	2	2	3	3	4	4	5	5	6	6
Refrigeration oil	Charge	L	3.4	3.4	4.14	6.6	8	9.9	12	13.2	16	16.5	20	19.8	24
Refrigerant	Charge	kg	5	6	7.5	10	10	15	15	20	20	25	25	30	30
Evaporator	Type		Shell –and–tube												
	Water flow rate	m^3/h	5.0	6.3	7.5	11.9	13.9	17.8	20.0	23.8	26.6	29.8	33.3	35.7	39.9
	Head loss	M	3.2	3.2	3.2	3.4	3.4	3.6	3.6	3.6	3.6	3.6	3.6	3.6	3.6
	Pipe size		R_2 1 1/2	R_2 2	R_2 2	ϕ 2"		ϕ 2 1/2"		ϕ 2 1/2"		ϕ2" + ϕ2 1/2"		2X ϕ2 1/2"	
Condenser	Type		Shell –and–tube												
	Water flow rate	m^3/h	6.1	7.6	9.2	14.5	17.0	21.8	24.3	29.1	32.4	36.3	40.6	43.5	48.7
	Head loss	M	3.5	3.5	3.5	3.6	3.6	3.8	3.8	3.8	3.8	3.8	3.8	3.8	3.8
	Joit size		Rc1 1/2	Rc 2	Rc 2	ϕ 2"		ϕ 2 1/2"		ϕ 2 1/2"		ϕ2" + ϕ2 1/2"		2X ϕ2 1/2"	
Net weight		kg	220	330	390	460	480	590	620	920	950	1050	1100	1180	1240
Operating weight		kg	240	360	430	500	520	650	680	1000	1030	1150	1200	1300	1360
Unit Dimensions	Length(A)	mm	1300	1400	1400	2400	2400	2400	2400	2400	2400	2400	2400	2400	2400
	Width(B)	mm	640	700	600	800	800	800	800	1400	1400	1400	1400	1400	1400
	Height(C)	mm	1350	1450	1450	1450	1450	1450	1450	1450	1450	1450	1450	1450	1450
Install Dimensions	Length (D)	mm	976	976	1176	1776	1776	1776	1776	1976	1976	1826	1826	1826	1826
	Width(F)	mm	400	400	400	550	550	550	550	550	550	1100	1100	1100	1100

UP SOAR

Dimension

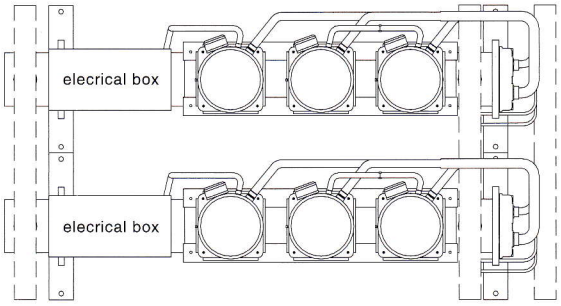

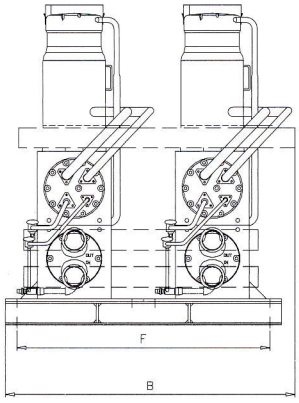

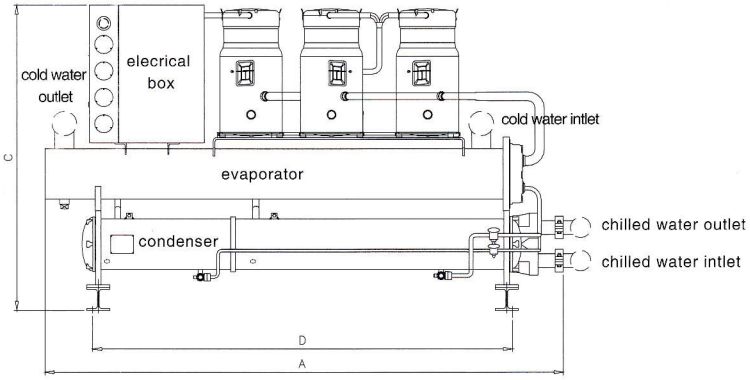

The users disposed the parts of dotted line (050T ~ 070F)